Gear case and Driving apparatus	*Date :* 01. Dec, 2009	*Revision :* 00	*Page :* 1/2
Brand : KAAZ	*Model :* KAT-NSP	*Product Code :* 244A03	

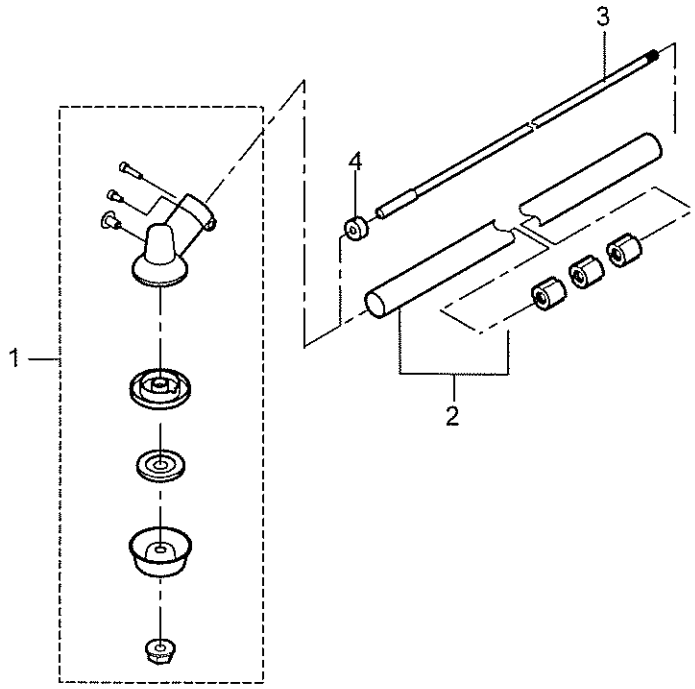

PARTS LIST

REF. No.	PARTS No.	PARTS NAME	Q'TY	INCLUDING	PRICE( )	RECOMM.(%) Lot.100	REMARKS
1	71008 357	GEAR CASE ASS'Y	1			1	
2	71130 144	MAIN PIPE C.P.	1			1	
3	64011 204	MAIN SHAFT	1			3	
4	36029 110	RUBBER BUSHING	1			1	

Handle and Fitting	Date : 01. Dec, 2009	Revision : 00	Page : 2/2
Brand : KAAZ	Model : KAT-NSP	Product Code : 244A03	

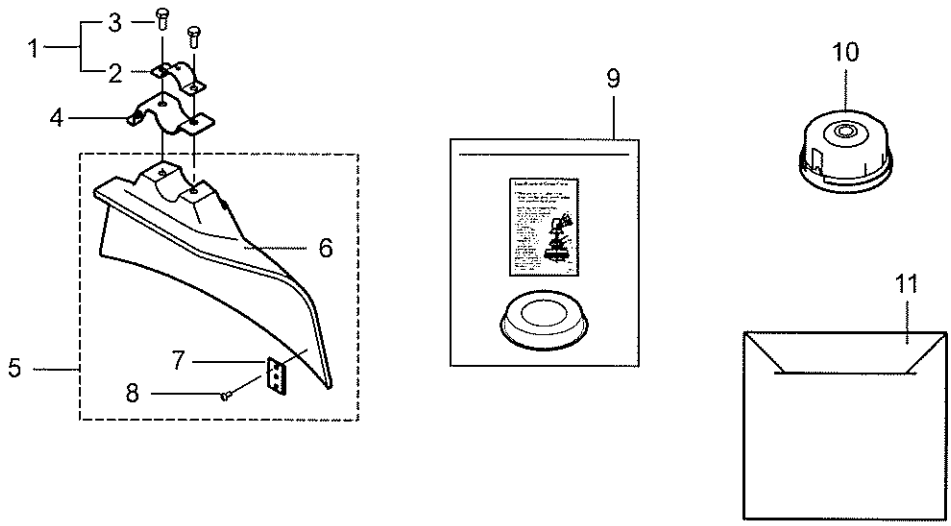

PARTS LIST

REF. No.	PARTS No.		PARTS NAME	Q'TY	INCLUDING			PRICE( )	RECOMM.(%) Lot.100		REMARKS
1	71038	183	GUARD BAND SET	1						1	
2	11029	134	SAFETY GUARD BAND		1					1	
3	31057	306	HEXAGON BOLT		2					1	M6×15
4	11029	143	SAFETY GUARD BAND	1						1	
5	71303	114	SAFETY GUARD SET	1						1	
6	36046	160	SAFETY GUARD		1					3	
7	91014	177	BLADE		1					3	
8	474L	0410	(+)TAPPING SCREW		2					1	4×10
9	71001	124	GRASS COVER SET	1						3	
10	71037	182	NYLON CUTTER SET 80	1						3	
11	91059	101	BLADE	1						5	φ230×4T

Gear case and Driving apparatus	Date : 01. Dec, 2009	Revision : 00	Page : 1/2
Brand : KAAZ	Model : VSP255	Product Code : 245004	

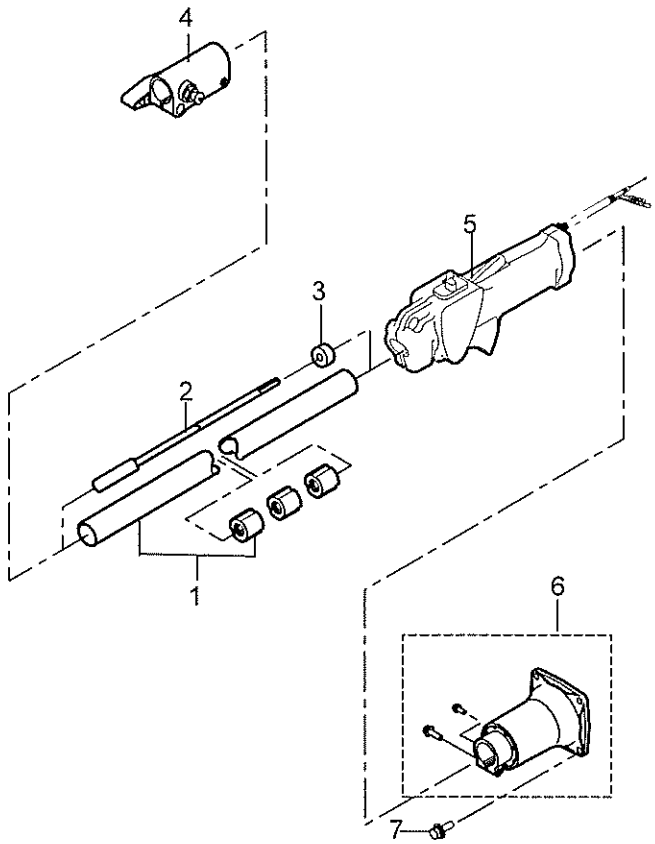

PARTS LIST

REF. No.	PARTS No.		PARTS NAME	Q'TY	INCLUDING	PRICE( )	RECOMM.(%) Lot.100		REMARKS
1	71130	145	MAIN PIPE C.P.	1				1	
2	64002	127	MAIN SHAFT C.P.	1				3	
3	36029	110	RUBBER BUSHING	1				1	
4	71249	101	PIPE JOINT ASS'Y	1				1	
5	71056	285	THROTTLE LEVER ASS'Y	1				1	
6	71010	246	CLUTCH CASE ASS'Y	1				1	
7	416N	0620	SOCKET SCREW (W/SW,PW)	4				1	M6×20

Handle and Fitting	Date : 01. Dec, 2009	Revision : 00	Page : 2/2
Brand : KAAZ	Model : VSP255	Product Code : 245004	

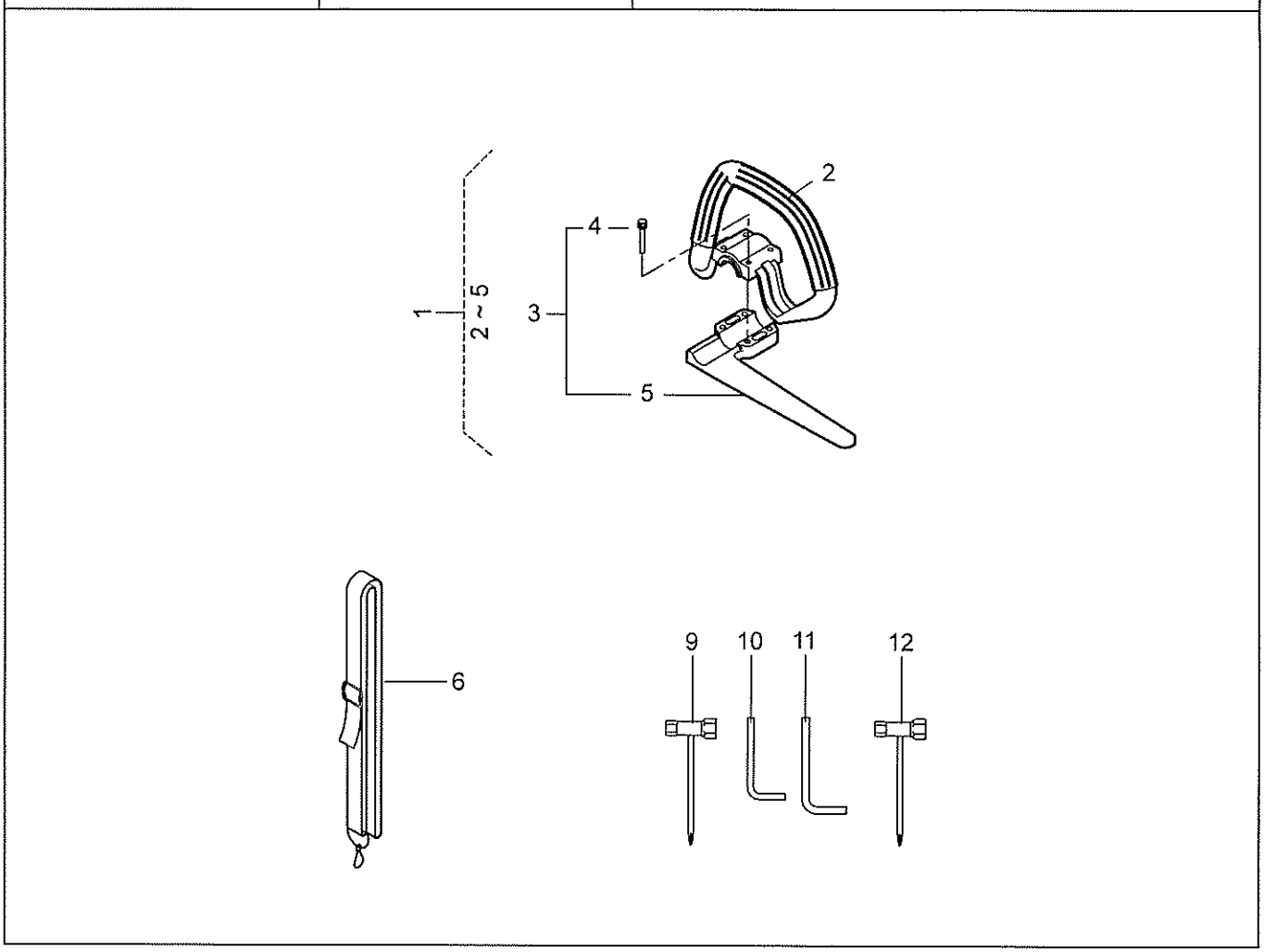

PARTS LIST

REF. No.	PARTS No.		PARTS NAME	Q'TY	INCLUDING			PRICE( )	RECOMM.(%) Lot.100		REMARKS
1	71304	117	SINGLE HANDLE SET	1						1	ϕ24
2	51023	152	SINGLE HANDLE		1					1	
3	71138	116	HANDLE BRACKET SET		1					1	
4	416N	0535	SOCKET SCREW			4				1	M5×35 (SW,PW)
5	51116	160	HANDLE BRACKET			1				1	
6	36063	189	SHOULDER BAND	1						1	
9	66006	120	BOX SPANNER	1						1	13 x 19 + Driver
10	66007	103	L WRENCH	1						1	4mm
11	66007	104	L WRENCH	1						1	5mm
12	66006	126	BOX SPANNER	1						1	16 x 17+ Driver